ABSA
the pressure equipment safety authority

9410 - 20 Ave N.W.
Edmonton, Alberta, Canada T6N 0A4
Tel: (780) 437-9100 / Fax: (780) 437-7787

June 17, 2020

Attention: Jun Wang
RADAFAB OILFIELD & INDUSTRIAL SUPPLY INC
7225 108 AVENUE SE
CALGARY, AB T2C 5G2

The design submission, tracking number 2020-02969, originally received on June 09, 2020 was surveyed and accepted for registration as follows:

CRN : 0H20773.2 **Accepted on:** June 17, 2020
Reg Type: NEW DESIGN **Expiry Date:** June 17, 2030
Drawing No. : R20-SB150/300/600/900/1500/2500 Rev 2
Fitting type: CLASS 150, 300, 600, 900, 1500 AND 2500 BLINDS

Description	MAWP	Design Temperature
As Noted		

The registration is conditional on your compliance with the following notes:

Line blanks are for use in B31.3 applications.

As indicated on AB-41 Statutory Declaration form and submitted documentation, the code of construction is B16.48.

- It is our understanding that the fitting(s), included as the scope of this submission, that is(are) subject to the Safety Codes Act shall comply with the requirements of the indicated Standard or Code of Construction on the AB-41 Statutory Declaration as supported by the attached data which identifies the dimensions, materials of construction, press./temp. ratings and the basis for such ratings, and the identification marking of the fittings.
- This registration is valid only for fittings fabricated at the location(s) covered by the QC certificate attached to the accepted AB-41 Statutory Declaration form.
- This registration is valid only until the indicated expiry date and only if the Manufacturer maintains a valid quality management system approved by an acceptable third-party agency until that date.
- Should the approval of the quality management system lapse before the expiry date indicated above, this registration shall become void.

An invoice covering survey and registration fees will be forwarded from our Revenue Accounts.

If you have any question don't hesitate to contact me by phone at (780) 433-0281 ext 3340 or fax (780) 437-7787 or e-mail Climenhaga@absa.ca.

Sincerely,

Sarah J Climenhaga

CLIMENHAGA, SARAH, E.I.T.
DOP Cert. No. D00009915

SPECTACLE BLINDS
(ASME B16.48-CLASS 150 ED2015)

ABSA
SAFETY CODES ACT • PROVINCE OF ALBERTA
ACCEPTED: 0H20773.2
See acceptance letter for conditions of registration.
Date: 2020-06-17 By:
SARAH CLINEKAMA, E.I.T.
This stamp and signature have been affixed electronically to this registered design as required by Section 36(1) of the Pressure Equipment Safety Regulation, in accordance with the Electronic Transactions Act.

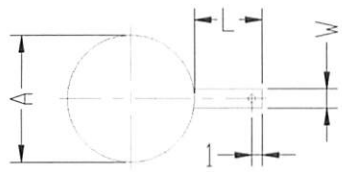

TYPE 1

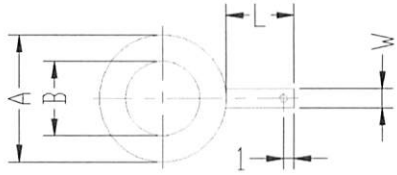

TYPE 1A

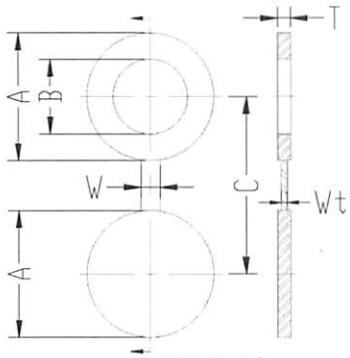

TYPE 2

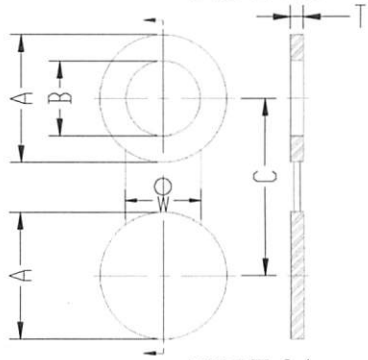

TYPE 2A

DIMENSIONS DATA (In Inches)										
SIZE	A	B	C	T	L	W		APPROXIMATE WEIGHT (LBS)		
								1	1A	2/2A
1/2	1 3/4	5/8	2 3/8	1/8	4	1-1/2		1	1	1
3/4	2 1/8	13/16	2 3/4	1/8	4	1-1/2		1	1	1
1	2 1/2	1 1/16	3 1/8	1/8	4	1-1/2		1	1	1
1 1/4	2 7/8	1 11/16	3 1/2	1/4	4	1-1/2		1	1	1
1 1/2	3 1/4	1 15/16	3 7/8	1/4	4	1-1/2		1	1	1
2	4	2 3/8	4 3/4	1/4	4	2		1	1	2
2 1/2	4 3/4	2 7/8	5 1/2	1/4	4	2		1	1	2
3	5 1/4	3 1/2	6	1/4	4	2-1/2		2	1	3
3 1/2	6 1/4	4	7	3/8	4	2-1/2		3	2	5
4	6 3/4	4 1/2	7 1/2	3/8	4	2-1/2		4	2	6
5	7 5/8	5 9/16	8 1/2	3/8	4	3		5	2	7
6	8 5/8	6 5/8	9 1/2	1/2	4	3		8	4	12
8	10 7/8	8 5/8	11 3/4	1/2	4	3		14	5	18
10	13 1/4	10 3/4	14 1/4	5/8	5	4		25	9	34
12	16	12 3/4	17	3/4	5	4		44	16	60
14	17 5/8	14	18 3/4	3/4	5	4-1/4		53	20	73
16	20 1/8	16	21 1/4	7/8	5	4-1/4		80	30	110
18	21 1/2	18	22 3/4	1	5	4-1/2		105	32	137
20	23 3/4	20	25	1 1/8	5	4-3/4		144	42	186
24	28 1/8	24	29 1/2	1 1/4	5	5-1/2		225	62	287

Notes:
1. Thickness of Wt Shall be minimum ¼" except T is less than ¼", Wt shall equal to T
2. Material: SA516-70N, SA240-316/L or SA240-304/L
3. Hole size is same as flange bolt hole
4. Pressure & temperature per B16.5 Table F2-1.1, F2-2.1, F2-2.2
5. Welds for handle should be full penetration if T equal or less ¼"
6. MDMT for SA516-70N is -50°F, for SA240-316/L or SA240-304/L is -425°F
   Impact test per Table 323.2.2 of B31.3
   If impact test required the minimum value is 15J for average and 12J for single

Drawing #: R20-SB150 Rev.2

Jun Wang - 2020 / 06 / 15

SPECTACLE BLINDS
(ASME B16.48-CLASS 300 ED2015)

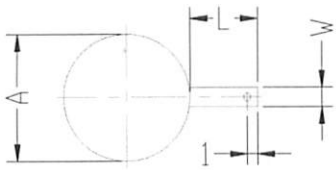

TYPE 1

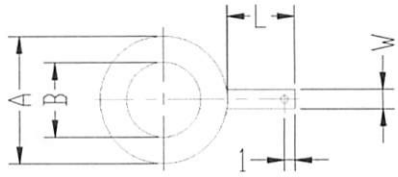

TYPE 1A

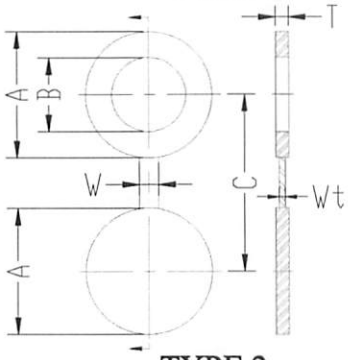

TYPE 2

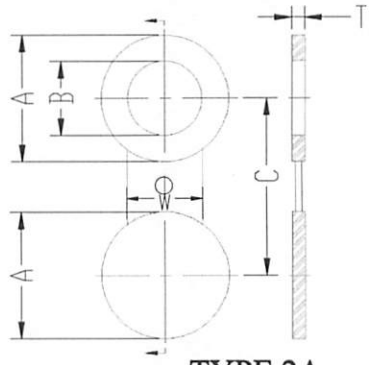

TYPE 2A

DIMENSIONS DATA (In Inches)										
SIZE	A	B	C	T	L	W		APPROXIMATE WEIGHT (LBS)		
								1	1A	2/2A
1/2	2	5/8	2 5/8	1/4	4	1-1/2		1	1	1
3/4	2 1/2	13/16	3 1/4	1/4	4	1-1/2		1	1	1
1	2 3/4	1 1/16	3 1/2	1/4	4	1-1/2		1	1	1
1 1/4	3 1/8	1 11/16	3 7/8	1/4	4	1-1/2		1	1	1
1 1/2	3 5/8	1 15/16	4 1/2	1/4	4	2		1	1	1
2	4 1/4	2 3/8	5	3/8	4	2		2	1	2
2 1/2	5	2 7/8	5 7/8	3/8	4	2-1/2		2	1	3
3	5 3/4	3 1/2	6 5/8	3/8	4	2-1/2		3	2	5
3 1/2	6 3/8	4	7 1/4	1/2	4	2-1/2		5	3	7
4	7	4 1/2	7 7/8	1/2	4	2-1/2		6	3	9
5	8 3/8	5 9/16	9 1/4	5/8	4	3		10	6	16
6	9 3/4	6 5/8	10 5/8	5/8	4	3		14	7	21
8	12	8 5/8	13	7/8	4	3-1/2		29	14	43
10	14 1/8	10 3/4	15 1/4	1	5	4		45	19	64
12	16 1/2	12 3/4	17 3/4	1 1/8	5	4		70	28	98
14	19	14	20 1/4	1 1/4	5	4-3/4		102	47	149
16	21 1/8	16	22 1/2	1 1/2	5	4-7/8		152	65	217
18	23 3/8	18	24 3/4	1 5/8	5	4-1/2		201	82	283
20	25 5/8	20	27	1 3/4	6	4-3/4		261	102	363
24	30 3/8	24	32	2	6	5-1/2		418	157	575

Notes:
1. Thickness of Wt Shall be minimum ¼" except T is less than ¼", Wt shall equal to T
2. Material: SA516-70N, SA240-316/L or SA240-304/L
3. Hole size is same as flange bolt hole
4. Pressure & temperature per B16.5 Table F2-1.1, F2-2.1, F2-2.2
5. Welds for handle should be full penetration if T equal or less ¼"
6. MDMT for SA516-70N is -50°F, for SA240-316/L or SA240-304/L is -425°F
   Impact test per Table 323.2.2 of B31.3
   If Impact test required the minimum value is 15J for average and 12J for single

Drawing #: R20-SB300 Rev.2

Jun Wang - 2020 / 06 / 15

SPECTACLE BLINDS
(ASME B16.48-CLASS 600 ED2015)

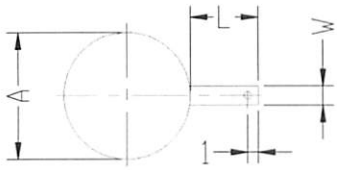

TYPE 1

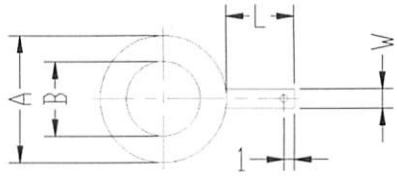

TYPE 1A

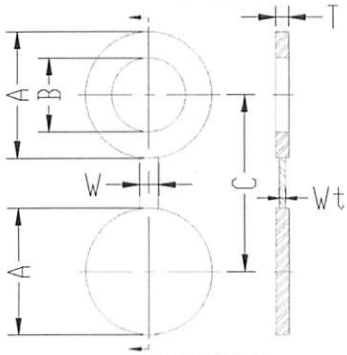

TYPE 2

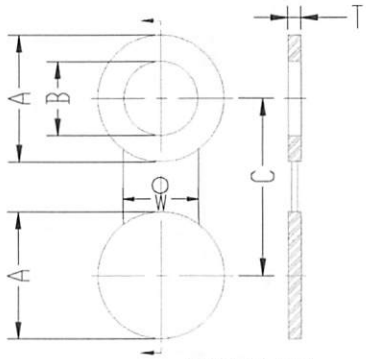

TYPE 2A

DIMENSIONS DATA (In Inches)										
SIZE	A	B	C	T	L	W		APPROXIMATE WEIGHT (LBS)		
								1	1A	2/2A
1/2	2	5/8	2 5/8	1/4	4	1-1/2		1	1	1
3/4	2 1/2	13/16	3 1/4	1/4	4	1-1/2		1	1	1
1	2 3/4	1 1/16	3 1/2	1/4	4	2-1/4		1	1	1
1 1/4	3 1/8	1 7/16	3 7/8	3/8	4	2-1/4		1	1	1
1 1/2	3 5/8	1 11/16	4 1/2	3/8	4	2-5/8		1	1	2
2	4 1/4	2 3/16	5	3/8	4	2-1/4		2	1	3
2 1/2	5	2 5/8	5 7/8	1/2	4	2-5/8		3	2	5
3	5 3/4	3 1/4	6 5/8	1/2	4	2-5/8		4	3	6
3 1/2	6 1/4	3 3/4	7 1/4	5/8	4	3		6	4	9
4	7 1/2	4 1/4	8 1/2	5/8	4	3		8	5	13
5	9 3/8	5 5/16	10 1/2	3/4	4	3-3/8		15	10	25
6	10 3/8	6 3/8	11 1/2	7/8	5	3-3/8		21	13	34
8	12 1/2	8 5/16	13 3/4	1 1/8	5	3-3/4		40	22	62
10	15 5/8	10 7/16	17	1 3/8	5	4-1/8		76	42	118
12	17 7/8	12 3/8	19 1/4	1 5/8	5	4-1/8		118	61	179
14	19 1/4	13 5/8	20 3/4	1 3/4	5	4-1/2		147	74	221
16	22 1/8	15 5/8	23 3/4	2	6	4-7/8		222	111	333
18	24	17 5/8	25 3/4	2 1/8	6	5-1/4		278	130	408
20	26 3/4	19 9/16	28 1/2	2 1/2	6	5-1/4		406	189	595
24	31	23 1/2	33	2 7/8	6	6		626	266	892

Notes:
1. Thickness of Wt Shall be minimum ¼" except T is less than ¼", Wt shall equal to T
2. Material: SA516-70N, SA240-316/L or SA240-304/L
3. Hole size is same as flange bolt hole
4. Pressure & temperature per B16.5 Table F2-1.1, F2-2.1, F2-2.2
5. Welds for handle should be full penetration if T equal or less ¼"
6. MDMT for SA516-70N is -50°F, for SA240-316/L or SA240-304/L is -425°F
   Impact test per Table 323.2.2 of B31.3
   If Impact test required the minimum value is 15J for average and 12J for single

Drawing #: R20-SB600 Rev.2

Jun Wang - 2020 / 06 / 15

SPECTACLE BLINDS
(ASME B16.48-CLASS 900 ED2015)

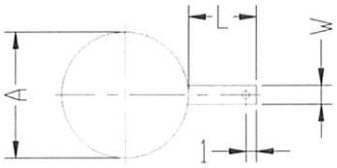

TYPE 1

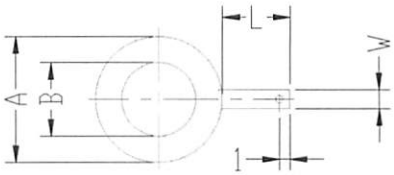

TYPE 1A

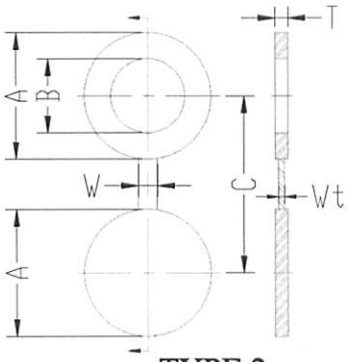

TYPE 2

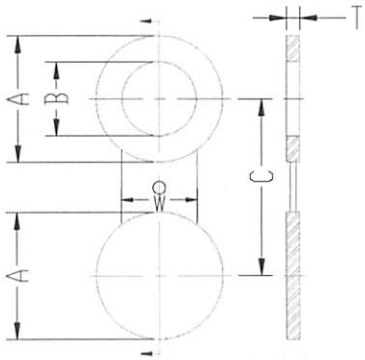

TYPE 2A

DIMENSIONS DATA (In Inches)										
SIZE	A	B	C	T	L	W		APPROXIMATE WEIGHT (LBS)		
								1	1A	2/2A
1/2	2 3/8	5/8	3 1/4	1/4	5	1-1/2		1	1	1
3/4	2 5/8	13/16	3 1/2	1/4	5	1-5/8		1	1	1
1	3	1 1/16	4	1/4	5	2-1/4		1	1	1
1 1/4	3 3/8	1 7/16	4 3/8	3/8	5	2-1/4		1	1	2
1 1/2	3 3/4	1 11/16	4 7/8	3/8	5	2-5/8		1	1	2
2	5 1/2	2 3/16	6 1/2	1/2	5	2-1/4		3	3	6
2 1/2	6 3/8	2 5/8	7 1/2	1/2	5	2-5/8		5	4	9
3	6 1/2	3 1/4	7 1/2	5/8	5	2-5/8		6	5	11
4	8	4 1/4	9 1/4	3/4	5	3		11	8	19
5	9 5/8	5 5/16	11	7/8	5	3-3/8		18	13	31
6	11 1/4	6 3/4	12 1/2	1	5	3-3/8		29	18	47
8	14	8 5/16	15 1/2	1 3/8	5	3-3/4		61	39	98
10	17	10 7/16	18 1/2	1 5/8	5	4-1/8		107	66	173
12	19 1/2	12 3/8	21	1 7/8	5	4-1/8		162	96	258
14	20 3/8	13 5/8	22	2 1/8	6	4-1/2		212	111	311
16	22 1/2	15 5/8	24 1/4	2 3/8	6	4-7/8		272	141	413
18	25	17 5/8	27	2 5/8	6	5-1/4		372	187	559
20	27 3/8	19 9/16	29 1/2	2 7/8	6	5-1/4		488	239	727
24	32 7/8	23 1/2	35 1/2	3 1/2	6	6		857	438	1276

Notes:
1. Thickness of Wt Shall be minimum ¼" except T is less than ¼", Wt shall equal to T
2. Material: SA516-70N, SA240-316/L or SA240-304/L
3. Hole size is same as flange bolt hole
4. Pressure & temperature per B16.5 Table F2-1.1, F2-2.1, F2-2.2
5. Welds for handle should be full penetration if T equal or less ¼"
6. MDMT for SA516-70N is -50°F, for SA240-316/L or SA240-304/L is -425°F
   Impact test per Table 323.2.2 of B31.3
   If Impact test required the minimum value is 15J for average and 12J for single

Drawing #: R20-SB900 Rev.2

Jun Wang - 2020 / 06 / 15

SPECTACLE BLINDS
(ASME B16.48-CLASS 1500 ED2015)

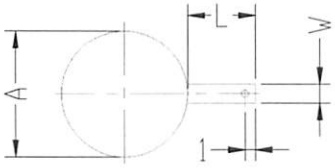

TYPE 1

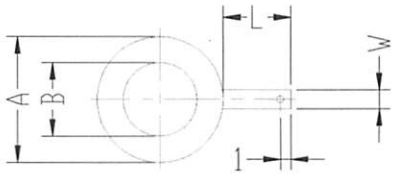

TYPE 1A

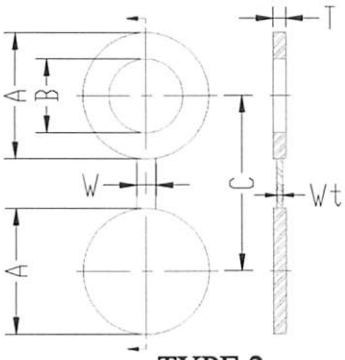

TYPE 2

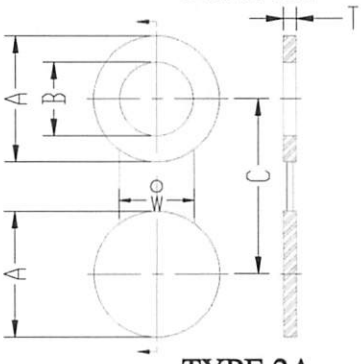

TYPE 2A

DIMENSIONS DATA (In Inches)										
SIZE	A	B	C	T	L	W		APPROXIMATE WEIGHT (LBS)		
								1	1A	2/2A
1/2	2 3/8	5/8	3 1/4	1/4	5	1-1/2		1	1	1
3/4	2 5/8	13/16	3 1/2	3/8	5	1-5/8		1	1	1
1	3	1 1/16	4	3/8	5	2-1/2		1	1	2
1 1/4	3 3/8	1 3/8	4 3/8	3/8	5	2-1/2		1	1	2
1 1/2	3 3/4	1 5/8	4 7/8	1/2	5	2-3/4		2	1	3
2	5 1/2	2 1/16	6 1/2	1/2	5	2-3/4		3	3	6
2 1/2	6 3/8	2 1/2	7 1/2	5/8	6	3		6	5	11
3	6 3/4	3 1/16	8	3/4	6	3		8	6	14
4	8 1/8	4	9 1/2	7/8	6	3-1/2		13	10	23
6	11	6 1/16	12 1/2	1 3/8	6	3-1/2		37	26	63
8	13 3/4	8	15 1/2	1 5/8	7	4		70	46	116
10	17	10	19	2	8	4-1/2		131	86	217
12	20 3/8	11 15/16	22 1/2	2 3/8	8	4-1/2		232	155	387
14	22 5/8	13 1/8	25	2 5/8	9	5		304	202	506
16	25 1/8	15	27 3/4	3	9	5-1/4		429	276	705
18	27 5/8	16 7/8	30 1/2	3 3/8	10	5-3/4		584	366	950
20	29 5/8	18 13/16	32 3/4	3 3/4	10	6		746	445	1191
24	35 3/8	22 5/8	39	4 3/8	10	7		1241	733	1974

Notes:
1. Thickness of Wt Shall be minimum ¼" except T is less than ¼", Wt shall equal to T
2. Material: SA516-70N, SA240-316/L or SA240-304/L
3. Hole size is same as flange bolt hole
4. Pressure & temperature per B16.5 Table F2-1.1, F2-2.1, F2-2.2
5. Welds for handle should be full penetration if T equal or less ¼"
6. MDMT for SA516-70N is -50°F, for SA240-316/L or SA240-304/L is -425°F
   Impact test per Table 323.2.2 of B31.3
   If Impact test required the minimum value is 15J for average and 12J for single

Drawing #: R20-SB1500 Rev.2

Jun Wang - 2020 / 06 / 15

SPECTACLE BLINDS
(ASME B16.48-CLASS 2500 ED2015)

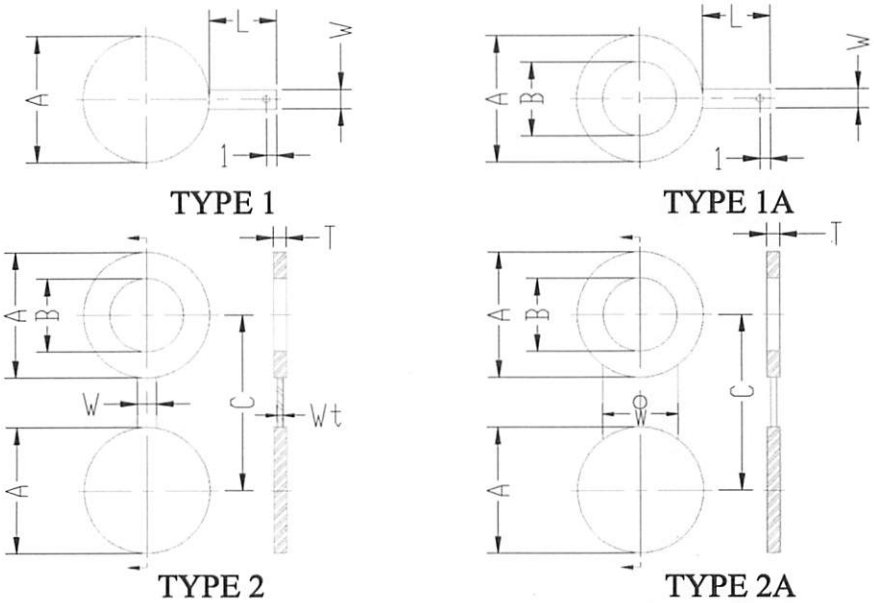

DIMENSIONS DATA (In Inches)										
SIZE	A	B	C	T	L	W		APPROXIMATE WEIGHT (LBS)		
								1	1A	2/2A
1/2	2 5/8	5/8	3 1/2	3/8	5	1-1/2		1	1	1
3/4	2 7/8	13/16	3 3/4	3/8	5	1-5/8		1	1	1
1	3 1/4	1 1/16	4 1/4	3/8	5	2-1/2		1	1	2
1 1/4	4	1 3/8	5 1/8	1/2	5	2-1/2		2	2	3
1 1/2	4 1/2	1 5/8	5 3/4	5/8	5	2-3/4		3	3	5
2	5 5/8	2 1/16	6 3/4	5/8	5	2-3/4		5	4	9
2 1/2	6 1/2	2 1/2	7 3/4	3/4	6	3		7	6	13
3	7 5/8	3 1/16	9	7/8	6	3		12	10	22
4	9 1/8	4	10 3/4	1 1/8	7	3-1/2		44	40	84
6	12 3/8	6 1/16	14 1/2	1 5/8	8	3-1/2		56	43	99
8	15 1/8	7 13/16	17 1/4	2 1/8	8	4		110	81	191
10	18 5/8	9 3/4	21 1/4	2 5/8	9	4-1/2		206	149	355
12	21 1/2	11 3/8	24 3/8	3 1/8	9	4-1/2		327	235	562

Notes:
1. Thickness of Wt Shall be minimum ¼" except T is less than ¼", Wt shall equal to T
2. Material: SA516-70N, SA240-316/L or SA240-304/L
3. Hole size is same as flange bolt hole
4. Pressure & temperature per B16.5 Table F2-1.1, F2-2.1, F2-2.2
5. Welds for handle should be full penetration if T equal or less ¼"
6. MDMT for SA516-70N is -50°F, for SA240-316/L or SA240-304/L is -425°F
   Impact test per Table 323.2.2 of B31.3
   If Impact test required the minimum value is 15J for average and 12J for single

Drawing #: R20-SB2500 Rev.2

Jun Wang - 2020 / 06 / 15